AESSEAL®
ENVIRONMENTAL TECHNOLOGY

TPDS™

Tailings Pump Double Seal

- Double Heavy Duty Slurry Seal
- For use on difficult applications including slurry pumping, tailings, and other heavy-duty slurry seal applications.

www.aesseal.com

Double Heavy Duty Slurry Seal

The AESSEAL® TPDS™ seal is specifically designed for heavy-duty slurry applications where barrier fluid is required to ensure optimum running conditions.

The seal design uses the latest multi-spring double stationary pusher seal technology. This enhances durability and performance, thereby helping to increase seal life.

Key Features / Benefits

- Double heavy-duty stationary slurry seal for arduous duties
- Solid drive mechanism and thicker face sections to handle high pressures and temperatures
- Large BI and BO ports (typically 1/2” or 3/4” NPT) to enhance heat removal
- Hydraulically balanced seal faces (inboard & outboard)
- Bi-directional rotation for versatile application

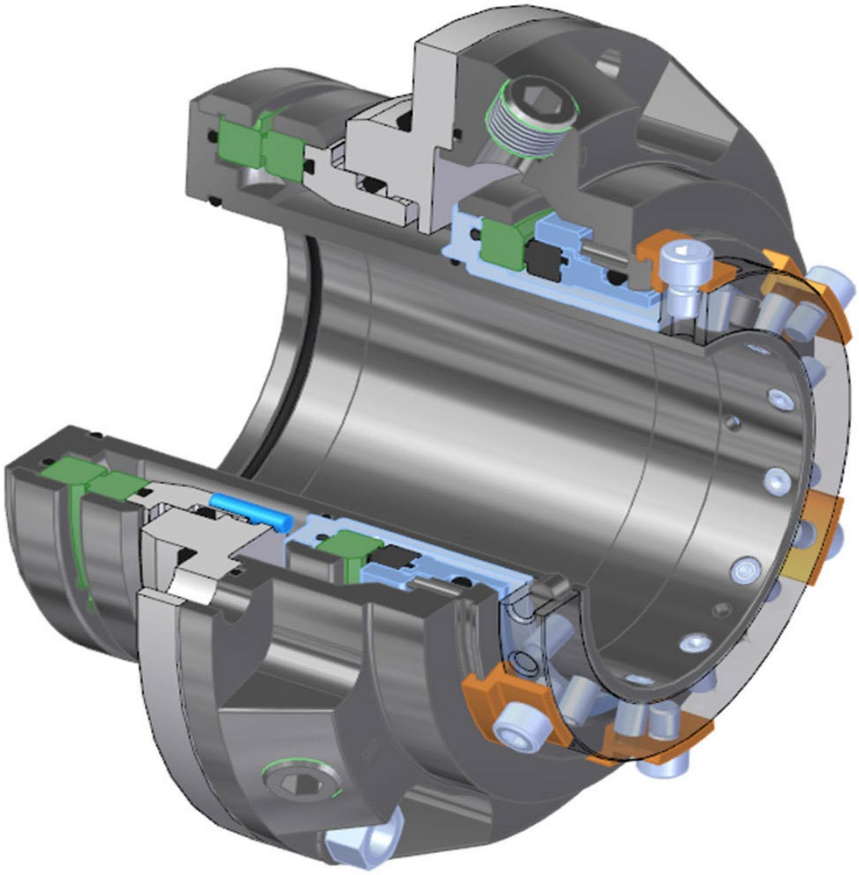

TPDS™ — Tailings Pump Double Seal

The TPDS™ double heavy duty slurry seal is designed for use on difficult applications including slurry pumping, tailings, and other heavy-duty slurry seal applications.

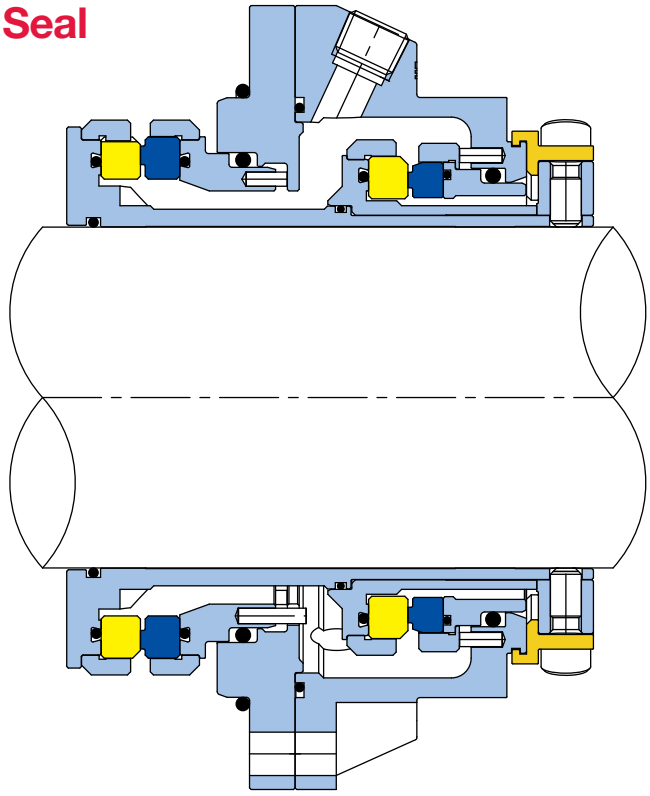

Typical Duties

- Barrier Pressures up to 40 barg (580 psig)
- Peripheral speeds up to 12 m/s (2360 ft/min)
- Temperatures up to 180°C (356°F)

*** At the seal the temperature would be optimized by appropriate API plan

Shaft Size	100mm – 220mm
Face Options	Rotary / Stationary / Rotary / Stationary (Hard / Hard / Hard / Hard) Silicon Carbide / Silicon Carbide Graphite Impregnated SiC / Silicon Carbide
Elastomer options	FKM / EPDM / FEPM / FFKM
Gasket Options:	O-Ring (standard) – AF1, GFT
Metallurgy options:	Super Duplex (standard) – no alternate option

Contact AESSEAL® technical department for dimensional information and availability.

> Our purpose is to give our customers such exceptional service that they need never consider alternative sources of supply.

AESSEAL®

ENVIRONMENTAL TECHNOLOGY

To experience the exceptional, please contact your local representative. Discover full details on our website:

www.aesseal.com

This brochure is fully recyclable. When laminated, a sustainable, biodegradable and recyclable lamination is used.

For further information and safe operating limits contact our technical specialists at the locations below.

THE QUEEN'S AWARDS FOR ENTERPRISE: SUSTAINABLE DEVELOPMENT 2022

THE KING'S AWARDS FOR ENTERPRISE 2025

AESSEAL plc is certified to:

ISO 9001, ISO 14001, ISO/IEC 20000, ISO/IEC 27001,ISO/TS 29001, ISO 37001, ISO 45001 & ISO 50001

Use double mechanical seals with hazardous products. Always take safety precautions:

- Guard your equipment
- Wear protective clothing

SAFETY NOTICE

Containment Seals (2CW-CS or 2NC-CS)

Monitoring the containment seal's (CS) integrity is important. Review the guidance to understand risks, apply best practices & ensure safe, reliable operation.

UK Sales & Technical advice:

AESSEAL plc
Mill Close
Bradmarsh Business Park
Rotherham,
S60 1BZ, UK

Tel: +44 (0) 1709 369966
E-mail: **enquiries@aesseal.info**
www.aesseal.com

NET ZERO

Net Zero champions globally

INVESTOR IN PEOPLE

USA Sales & Technical advice:

AESSEAL Inc.
355 Dunavant Drive
Rockford,
TN. 37853,
USA

Tel: +1 865 531 0192
E-mail: **inquiries@aesseal.us**
www.aesseal.us

Important: Since the conditions and methods of use of this product are beyond our control, AESSEAL plc expressly disclaims any and all liability resulting or arising from any use of this product or reliance on any information contained in this document - AESSEAL plc standard conditions of sale apply. All sizes are subject to manufacturing tolerances. We reserve the right to modify specifications at any time. AESSEAL® is a Registered Trademark of AES Engineering Ltd, AESSEAL plc recognizes all trademarks and trademark names as the property of their owners.

LIT-UK/US-L-TPDS-01b

Copyright © 2025 AESSEAL plc

11/2025