SMART TRACK®

Designed to track and maintain a constant differential with fluctuations in process pressure

Features

- Self regulating
- Quick response
- Simplicity
- Factory set
- Ergonomic

Benefits

- Tracks pressure to maintain an optimum double seal environment
- Transient and upset conditions handled with ease
- A compact alternative to complex seals & systems
- No operator intervention required. Unit is supplied pre-set
- Simple in line connections and mounting

SMART TRACK®

Designed to track and maintain a constant differential with fluctuations in process pressure.

Patented isolating pressure tracking valve that will maintain a positive differential pressure between a reference input pressure (seal chamber / vessel pressure) and an output pressure (typically API Plan 53A) with the connection of a suitable supply (Typically nitrogen at a pressure greater than maximum operating barrier pressure). The device has an integrated isolation unit that will provide a physical barrier between product (seal chamber / vessel fluid) and the device.

Smart Track® Typical Application

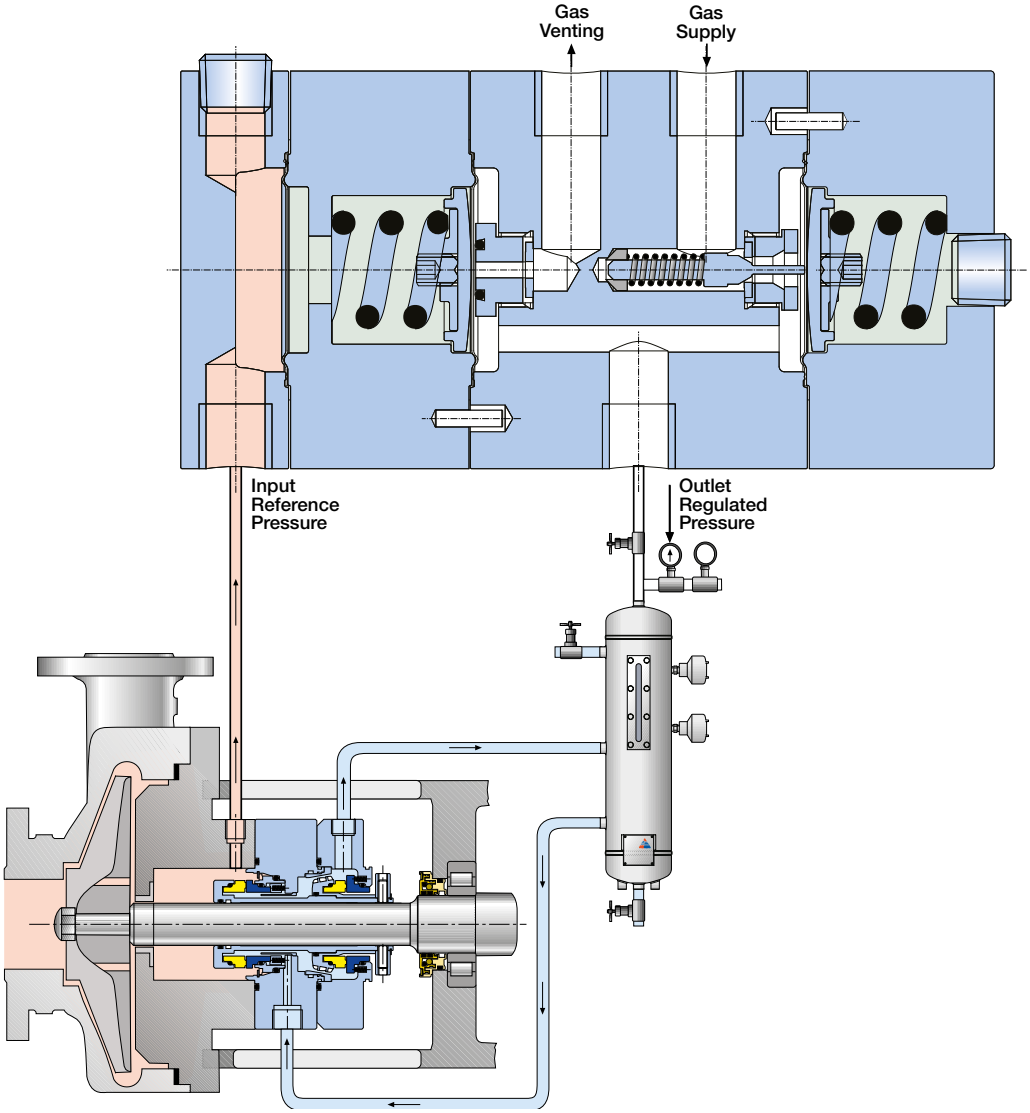

A unique & simple solution designed to maximizes mechanical seal reliability through optimized barrier fluid pressure control.

Specifications

Typical Duties:

- Double Seal Barrier fluid support systems
- Seal Chamber pressures from -1 barg to 42 barg (-14.5 to 415 psig)
- Valve temperatures 4º to 80ºC (39º to 176ºF)
- Operating pressure differential from 2 bar (30 psi) to 4 bar (60 psi)
- **Size:** L 6.9” (175mm) x Ø3.0” (75mm)
- **Connections:** Supply, Output, Vent, Reference I/P = ¼ NPT
- **Weight:** 5.5Kg (12.2lb)
- **Mounting:** 2 x M8 (Orientated 90º to Ports)

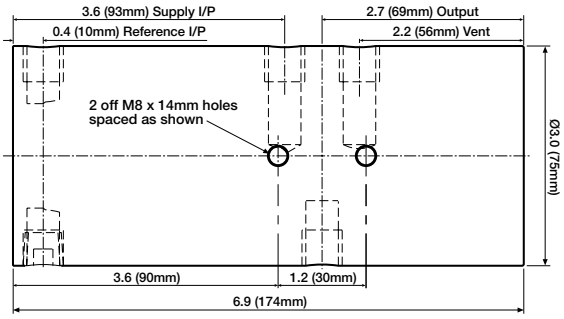

Wetted Materials:

- **Diaphragm:** Alloy X750
- **Bias Spring:** 316 Stainless Steel
- **Body, End Caps etc:** 316L Stainless Steel
- **Isolator:** 316 Stainless Steel
- **Isolator transfer fluid:** Ethylene Glycol other fluids are available

Key Features:

- Rapid response to changes in input reference (seal chamber) pressure
- Dynamic Pressure differential maintained during rapid pressure transients
- Integrated isolation unit
- Minimal external connections
- Capable of operating in vacuum conditions

Technical Data:

Supply Inlet Pressure Max: 46 barg (675 psig)
Reference (Seal Chamber / Vessel) Max: 42 barg (615 psig)
Pressure differential transients (Reference to Output): 1– 8 bar (14.5 – 120 psi)
Maximum rate of input pressure change: 13 bar/s (190 psi/s)*
Supply consumption: Application dependent consult AESSEAL® technical department

* Pressurised system volume of 10 Litre (2.64 Gallon US) @ 20ºC (68ºF), nominal 2 bar (30 psi) differential.

AESSEAL®

ENVIRONMENTAL TECHNOLOGY

To experience the exceptional, please contact your local representative. Discover full details on our website:

www.aesseal.com

This brochure is fully recyclable. When laminated, a sustainable, biodegradable and recyclable lamination is used.

For further information and safe operating limits contact our technical specialists at the locations below.

THE QUEEN'S AWARDS FOR ENTERPRISE: INNOVATION 2021

THE QUEEN'S AWARDS FOR ENTERPRISE: SUSTAINABLE DEVELOPMENT 2022

AESSEAL plc is certified to:

ISO 9001, ISO 14001, ISO/IEC 20000, ISO/IEC 27001, ISO/TS 29001, ISO 37001, ISO 45001 & ISO 50001

Use double mechanical seals with hazardous products.

Always take safety precautions:

WARNING

- **Guard your equipment**
- **Wear protective clothing**

UK Sales & Technical advice:
AESSEAL plc
Mill Close
Bradmarsh Business Park
Rotherham,
S60 1BZ, UK

Tel: +44 (0) 1709 369966
E-mail: **enquiries@aesseal.info**
www.aesseal.com

NET ZERO

Net Zero champions globally

INVESTOR IN PEOPLE

USA Sales & Technical advice:
AESSEAL Inc.
355 Dunavant Drive
Rockford,
TN. 37853,
USA

Tel: +1 865 531 0192
E-mail: **usa@aesseal.com**
www.aesseal.com