SHEET 1 OF 1

STATUS **Release for Production**

IF IN DOUBT ASK

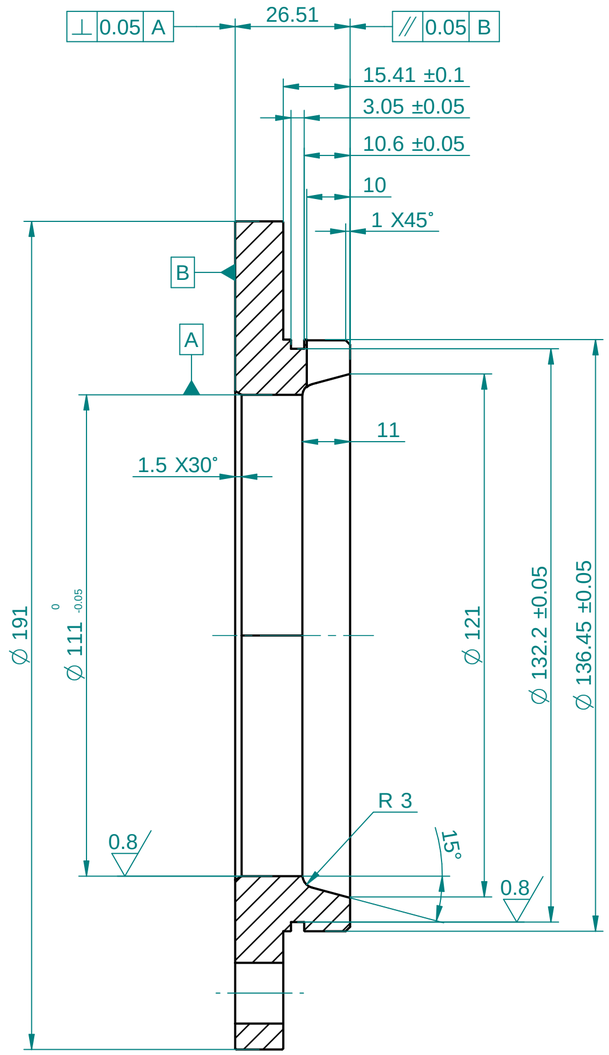

SECTION A-A

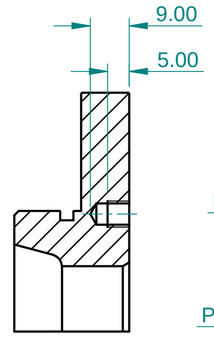

SECTION B-B

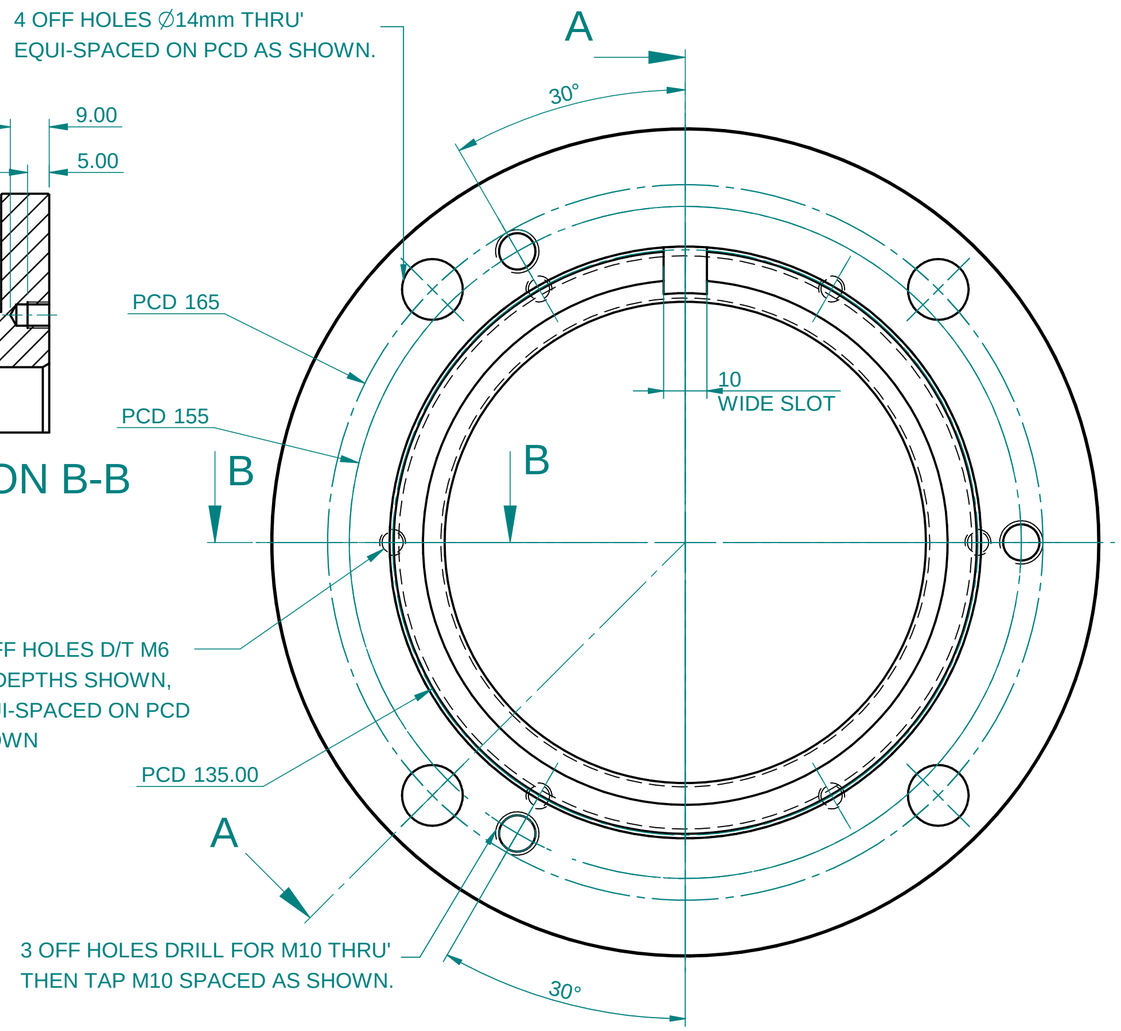

NOTES:-

1. REMOVE SHARP EDGES.
2. MASS=2.061 kg

ISSUE	ECR No	DRN	AUTH	DATE
B	EC3008025	SW	NH	29/04/15
C				
D				
E				
F				
G				
H				

EXPERIENCE THE EXCEPTIONAL

AESSEAL plc
BRADMARSH BUSINESS PARK
MILL CLOSE, TEMPLEBOROUGH
ROTHERHAM S60 1BZ

THIS DRAWING IS CONFIDENTIAL TO AESSEAL plc AND NEITHER THE DRAWING ITSELF, NOR ANY INFORMATION DERIVED FROM IT, SHOULD BE MADE PUBLIC, OR DIVULGED, EVEN IN CONFIDENCE TO ANOTHER PARTY WITHOUT THE EXPRESS PERMISSION OF AESSEAL plc.
© COPYRIGHT AESSEAL plc AS SIGNED AND DATED.

UNSPECIFIED TOLERANCES

LINEAR: +/- 0.01" (0.25mm)

ANGULAR: +/- 30'

SURFACE FINISH: 63 µin (1.6 µm)

CONCENTRICITY: 0.002" (0.05mm)

TITLE: 85mm WARMAN BEARING END PLATE (111mm)

PROJECTION: 3RD ANGLE

SCALE	SIZE
1:1	A2

UNITS: mm UOS

DRAWN	S KHEDKAR	26/02/2008
CHECKED	S KHEDKAR	26/02/2008

MAT'L: 316L SS
SRM: RS064/01
STOCK CODE: L1-111-02D---WAR/01

DRG No 2046180 **ISS.** B

2 inch 50mm