SHEET 1 OF 1

IF IN DOUBT ASK

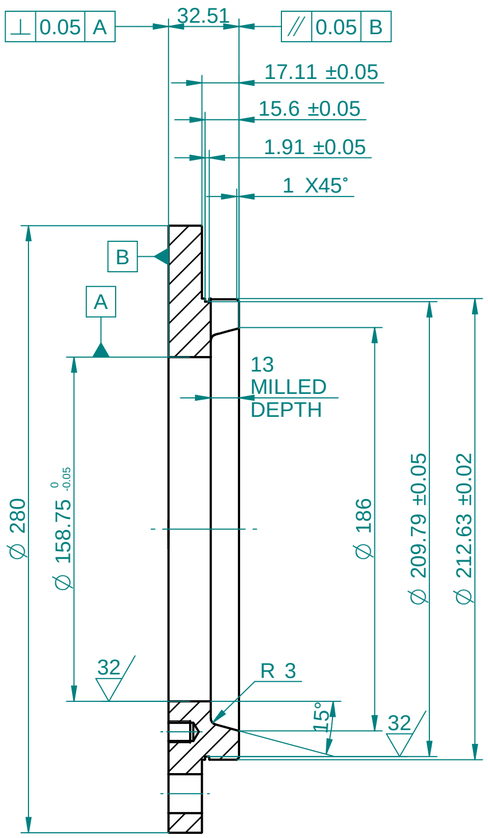

SECTION A-A

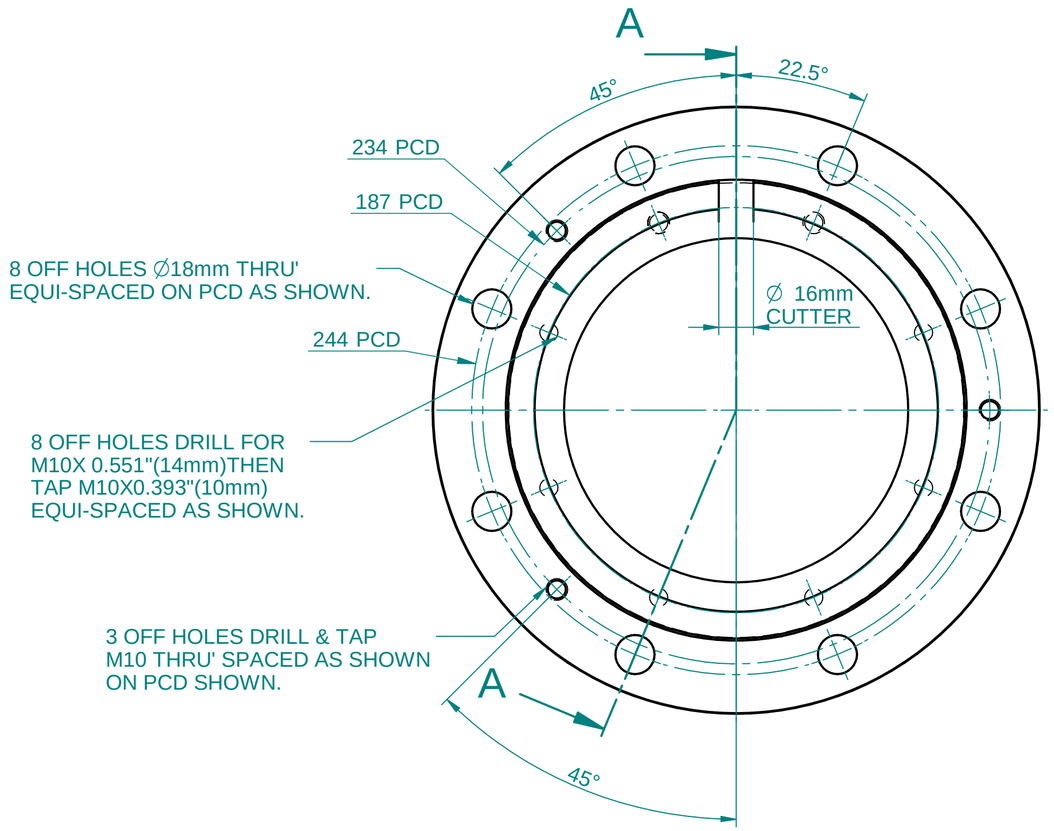

NOTES:-
1. REMOVE SHARP EDGES.
2. MASS=6.204 kg

ISSUE	AMEND No	DRN	AUTH	DATE
B	58013	AEC	ANW	05/08/11

UNSPECIFIED TOLERANCES

LINEAR: +/-0.01" (0.25mm)

ANGULAR: +/- 30'

SURFACE FINISH: 63 µin (1.6 µm)

CONCENTRICITY: 0.002" (0.05mm) T.I.R

PROJECTION: 3RD ANGLE

UNITS: MM UOS

SCALE: 1:2

SIZE: A2

AESSEAL plc
BRADMARSH BUSINESS PARK
MILL CLOSE, TEMPLEBOROUGH
ROTHERHAM S60 1BZ

THIS DRAWING IS CONFIDENTIAL TO AESSEAL plc AND NEITHER THE DRAWING ITSELF, NOR ANY INFORMATION DERIVED FROM IT, SHOULD BE MADE PUBLIC, OR DIVULGED, EVEN IN CONFIDENCE TO ANOTHER PARTY WITHOUT THE EXPRESS PERMISSION OF AESSEAL plc.
© COPYRIGHT AESSEAL plc AS SIGNED AND DATED.

	DRAWN	CHECK
DATE	14/03/2008	30-Jun-08
SIG	S Khedkar	Daniel Paris

TITLE
127mm WARMAN BEARING END PLATE
(158.75mm)

MAT'L 316L SS

SRM RS092/01

STOCK CODE L1-158-02F---WAR/01

DRG No 8010562

ISS. B

2 inch 50mm