SHEET 1 OF 1

IF IN DOUBT ASK

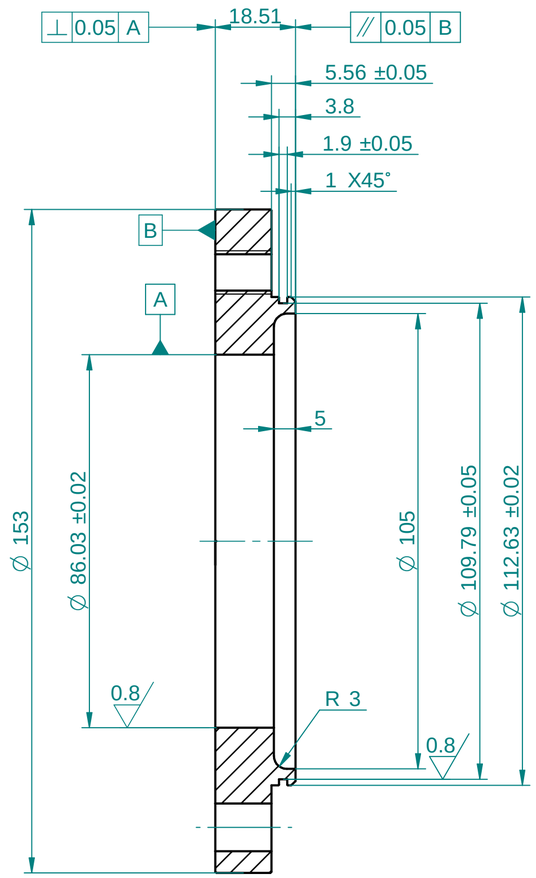

SECTION A-A

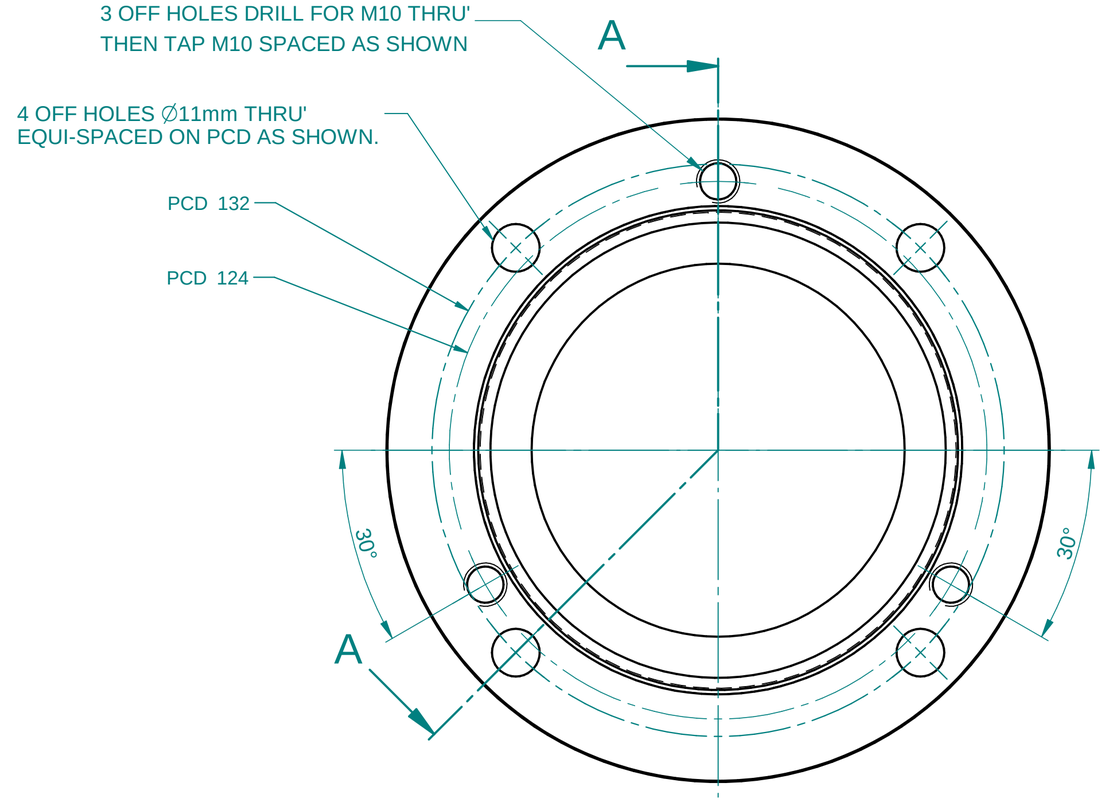

NOTES:-
1. REMOVE SHARP EDGES.
2. MASS=1.303 kg

Item	Stock Code	Title	Material	Qty
1	5SQ1123/01	1.375 CAPI TXS B3 DUAL SEAL SLEEVE	316L SS	1
2	2SX1201/01	1.500 BCORO DRIVE END	316L SS	1
3	DBVDB	DUMMY	316 L SS	1
4		Heavy Hex Nut, 3/4-10	Steel	1

ISSUE	AMEND No	DRN	AUTH	DATE

UNSPECIFIED TOLERANCES

LINEAR: +/-0.01" (0.25mm)

ANGULAR: +/- 30'

SURFACE FINISH: 63 µin (1.6 µm)

CONCENTRICITY: 0.002" (0.05mm) T.I.R

PROJECTION: 3RD ANGLE

UNITS: MM UOS

SCALE: 1:1

SIZE: A2

AESSEAL plc
BRADMARSH BUSINESS PARK
MILL CLOSE, TEMPLEBOROUGH
ROTHERHAM S60 1BZ

THIS DRAWING IS CONFIDENTIAL TO AESSEAL plc AND NEITHER THE DRAWING ITSELF, NOR ANY INFORMATION DERIVED FROM IT, SHOULD BE MADE PUBLIC, OR DIVULGED, EVEN IN CONFIDENCE TO ANOTHER PARTY WITHOUT THE EXPRESS PERMISSION OF AESSEAL plc. © COPYRIGHT AESSEAL plc AS SIGNED AND DATED.

	DRAWN	CHECK
DATE	27/02/2008	20-Apr-09
SIG	S Khedkar	S Sayyad

TITLE: 60mm WARMAN BEARING END PLATE (86mm)

MAT'L 316L SS

SRM RS050/01

STOCK CODE L1-086-02CCD-WAR/01

DRG No 8010440

ISS. A

2 inch 50mm