SAVE 25 Billion Gallons of Water and INCREASE Uptime

MINExpo 2012 Water Session - 25 September 2012

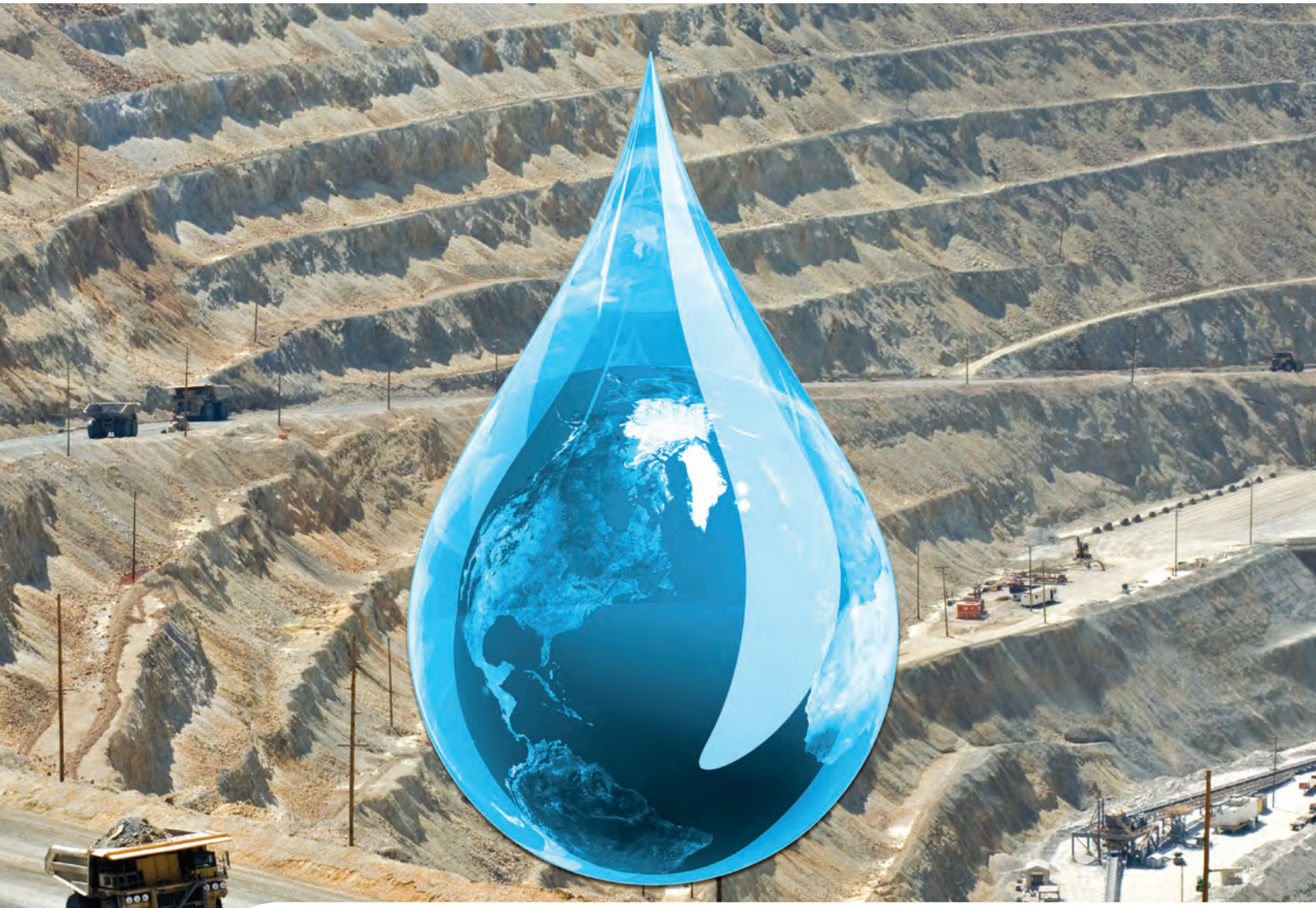

Chris Rehmann

Mining Business Manager

AESSEAL Inc. Rockford, TN, USA

chris.rehmann@aesseal.com

AESSEAL®

EXPERIENCE THE EXCEPTIONAL

SAVE 25 Billion Gallons of Water and INCREASE Uptime

Chris Rehmann, Mining Business Manager, AESSEAL, Inc
Presented at MINExpo 2012, Las Vegas, NV, 25 Sept., 2012

EXECUTIVE SUMMARY

Water is becoming more scarce and more expensive. Still, large quantities of water are essential to most mineral mining and extraction processes. Accurate water-balance planning over the life of the mine, and reduction of overall water consumption, are critical to a mine's success. This paper presents a technology for sealing slurry and process pumps that is proven to save millions of gallons of water per pump per year, while also increasing the MTBR (Mean Time Between Repairs) of the equipment with an ROI (Return on Investment) that is typically 6 months or less. Four case histories from global mining installations are presented which demonstrate:

- Elimination of 154 million gallons of wasted water per year,
- Savings of $30 million per year of product losses,
- Increased plant availability through elimination of 28 pump repairs, and
- Three-week ROI for a seal upgrade.

WATER, PUMPS, and SUSTAINABILITY

The growing scarcity of water on a global level, its fundamental importance to the mining industry, and the need to reduce water use has been stated by many experts such as Mohamed ElBoradei (Head of the IAEA)[1], and companies such as Newmont Mining[2], Barrick Gold[3], Rio Tinto[4], and Potash Corp[5]. Planning, sourcing, permitting, pumping, tracking, reporting, and disposing of process water consumes a significant portion of most mines' operating budgets, especially those that operate in arid regions of the world.

Eliminating water consumption from any part of the process is a worthy consideration for most mine operators. One area to consider for major reductions is the supply of gland water to the packing on process and slurry pumps.

The mining industry is one of the most arduous and expensive industries for the maintenance of rotating equipment. Not only must it deal with abrasive and corrosive applications, but it also has to accommodate historical "run-to-failure" maintenance practices and the difficulty of operating in remote locations. A common mining industry misconception is that the only way to achieve a reliable seal on these tough pumping applications is through the use of gland packing (Figure 1). However, gland packing goes hand in hand with high water consumption, high maintenance costs, poor equipment availability, and large production losses.

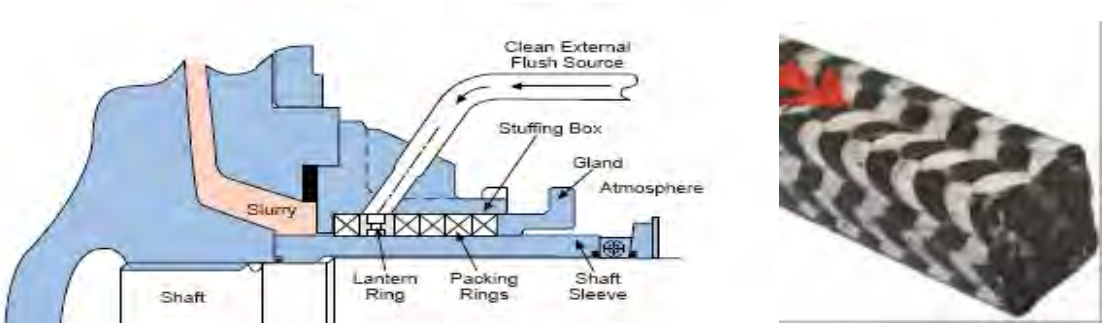

Figure 1. Gland packing. On left, typical arrangement of packing in a pump. On right, photo of braided packing.

[1]Mohamed ElBaradei, International Atomic Energy Agency: "The simple fact is that there is a limited amount of water on the planet, and we cannot afford to be negligent in its use. We cannot keep treating it as if it will never run out."

[2]Newmont Mining website, *Beyond the Mine: Journey Towards Sustainability:* "As the global competition for resources continues, water will become an increasing concern both within the industry and among broader society…. Globally, water is one of the most critical sustainability issues facing the extractives industry."

[3]Barrick Gold website, *Corporate Responsibility:* "Water is an important sustainability issue at local, regional, and global levels."

Mechanical seals were introduced to the mines a few decades ago, however, end-users were not properly educated and for years have been supplied the wrong seals, wrong materials, and wrong (or no) seal support systems. This contributed to the general misconception that mechanical seals do not work in the mining industry.

Mechanical seals DO work in the mining industry! Not only do mechanical seals work, they are collectively eliminating billions of gallons of wasted gland water each year, while simultaneously improving the MTBR of the pumps. Thousands of double mechanical seals are now operating successfully around the globe in some of the most remote and difficult phosphate, platinum, gold, potash, copper, and other mineral extraction operations. This has been made possible by simply following the golden rule of sealing: "Maintain a stable fluid film". This paper explains the problems associated with packing and how double mechanical seals solve these problems, and then shares some case histories where double seals have saved billions of gallons of water.

THE PROBLEMS with PACKING

Gland packing has been the traditional method of sealing pumps for nearly 100 years. Packing is generally available, relatively low-cost per unit, and most mechanics are familiar with its use. However, there are some inherent drawbacks. Packing --

- Requires large amounts of gland water for cooling and lubrication. A typical slurry pump requires 12 gpm (gallons per minute) of gland water, which equates to 6 million gallons per year.
- Requires more energy (than a mechanical seal) to turn the shaft, since it relies on a friction-fit against both the pump housing and the rotating shaft. A 30 hp motor can waste $1,700/year just to overcome the friction of the packing.
- Wears quickly and requires a high level of maintenance for adjustment and re-packing.
- Damages the shaft sleeve, due to the friction, requiring frequent sleeve replacement.
- Sprays gland water or process liquids directly onto the pump's bearing housing when it leaks, resulting in premature bearing failures.
- Puts about half of the gland water onto the ground (Figure 2), and the other half into the process. Both of these outcomes can have negative consequences.
- Creates housekeeping and safety issues from gland water on the ground around a pump (Figure 2).
- Causes corrosion that requires frequent repainting from gland water leaking on the pump and pump base.

Figure 2. Typical mining slurry pump with packing gland water can create a safety hazard and waste water.

[4]Rio Tinto website, *Policies, Standards and Commitments:* "Ensure that water management programmes follow a hierarchy of control (e.g., Avoid, Minimize, Re-use, and Recycle."

[5]Potash Corp, *2010 Online Sustainability Report:* "For 2011 we are aiming to maintain or reduce water usage per tonne of product from 2010 levels."

A PARTIAL SOLUTION: SINGLE MECHANICAL SEALS

The key to successful sealing is to maintain a cool, clean and stable fluid film between the faces. When a single mechanical seal is used, the liquid being pumped (the pumpage) becomes the fluid film (Figure 3). This works fine when the pumpage is a clean liquid such as water. However, when the pumpage is a slurry, the abrasive nature of the slurry can quickly damage the seal faces and result in component failure .

A single mechanical seal incorporates two flat faces, one stationary and one rotating, running against each other with a fluid film between them providing lubrication. Without a stable fluid film between the faces, they would be in full contact known as “dry running”, which would lead to rapid heat buildup and component failure (Figure 4). In this case, an external flush of clean liquid (typically water) can be injected on the process side of the single seal to force the slurry away, and surround the seal faces with a cool, clean liquid. The primary drawback of this arrangement, known as API Plan 32, is the injection water into the process at a higher pressure than the stuffing box pressure. This is problematic on tailings pumps in series, where the final discharge pressure can reach several hundred psi, and special pump systems must be installed and maintained just to supply this high pressure flush water.

Typical flush injection can waste several million gallons of clean water per year. If the process is hot and the injected flush water is cool, large amounts of energy must be added to raise the temperature of the flush water. If the process is sensitive to dilution, even more energy must be added to evaporate the flush water from the process.

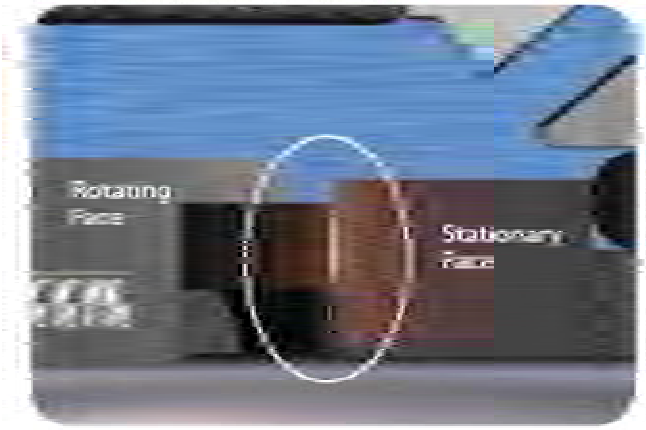

Figure 3 - Mechanical seal faces with a fluid film of fresh, clean water will run cooler and longer

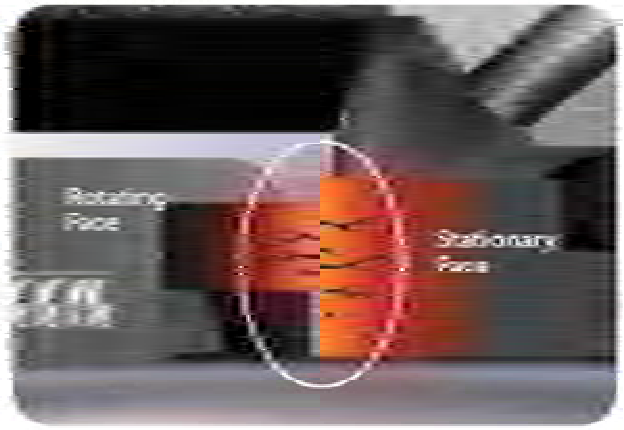

Figure 4. Dry- running of mechanical seal faces destroys the fluid film, resulting in overheating and failure.

THE COMPLETE SOLUTION: DOUBLE MECHANICAL SEAL and SUPPORT SYSTEM

All of the drawbacks of both gland packing and single seals described above can be eliminated with a properly-chosen double mechanical seal and support system. A double seal has two sets of faces; one set sealing to the process fluid and one set sealing to atmosphere, with a barrier region in between the faces (Figure 5).

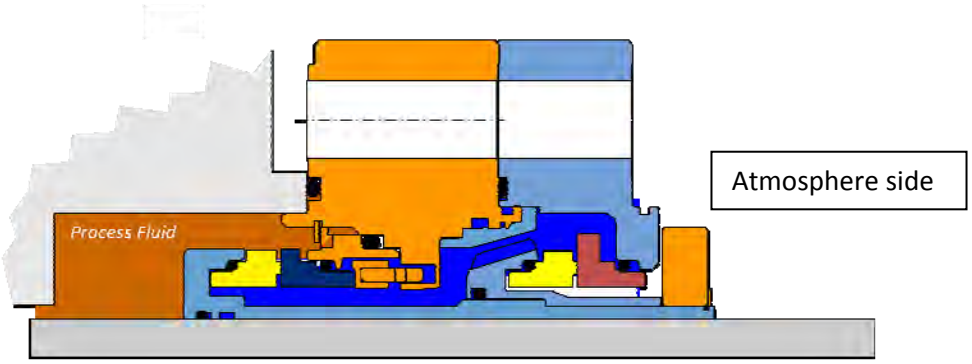

Figure 5. Diagram of a typical double mechanical seal showing inboard seal faces sealing to the process fluid, the outboard seal faces sealing to atmosphere, and a (blue) barrier fluid in between.

A properly-designed seal support system (tank or “seal pot”, see Figure 6) supplies a clean, cool liquid (usually water) to the barrier space between the seals, at a higher pressure than the process fluid in the pump. Thus there is a pressure differential which forces the clean barrier fluid across the faces, forming a stable fluid film. As the mechanical seal faces generate heat, the hot water in the barrier zone of the seal rises to the tank. The tank radiates heat to the atmosphere, and the cooler, denser water sinks back down to the seal. This process is known as a “thermosiphon”, and it enables the tank to provide the mechanical seal with a constant supply of fresh, cool, clean, pressurized water for the fluid film, with no moving parts!

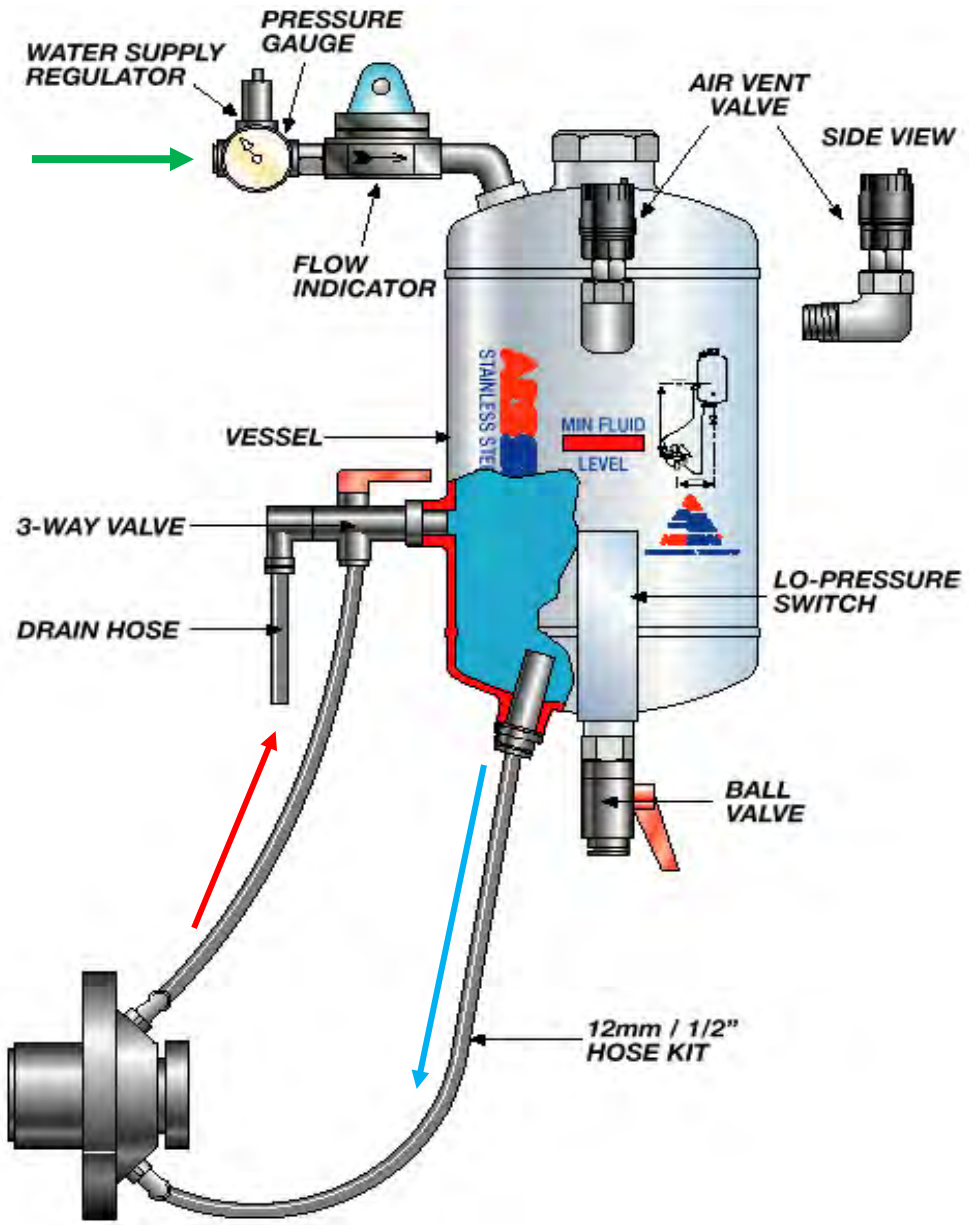

Figure 6. Overview of a tank support system, connected to a mechanical seal. Note the warm water rising (red arrow) from the seal and the cool water falling (blue arrow) back down to the seal via thermosiphoning. The tank itself is self-filling and self-pressurizing via the plant water supply connected at the green arrow.

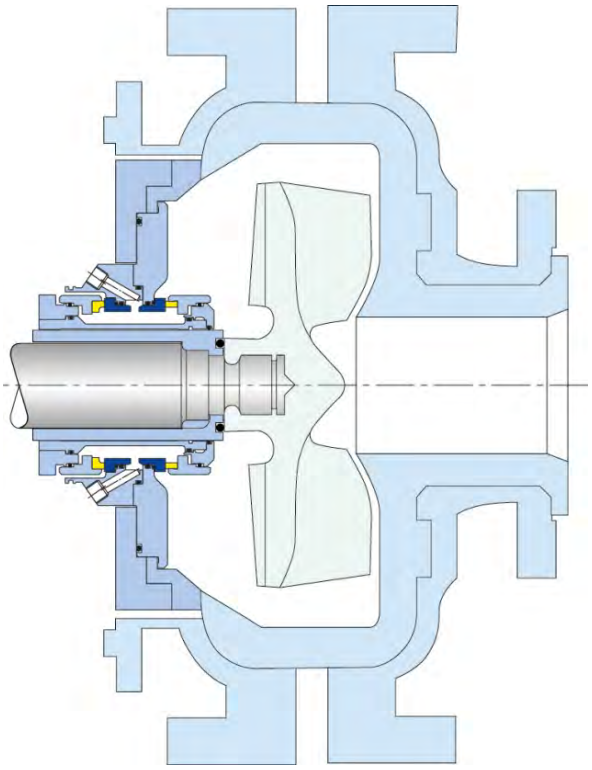

Figure 7. Diagram of a conventional “open throat seal chamber”, which exposes the seal to the full velocity of the slurry.

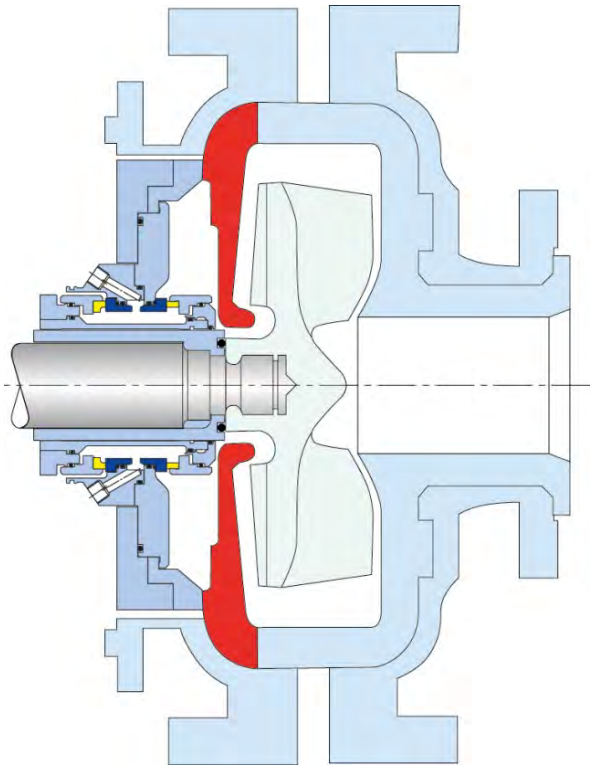

Figure 8. Alternate “closed frame plate” pump design, which hides the seal from the full velocity of the slurry, thus reducing the need for expensive, exotic metallurgy for the seal components. These closed frame plates are available from most pump OEMs on request.

In addition to maintaining a stable fluid film on the seal faces, it is useful to control the design of the seal chamber to promote maximum seal life. Many slurry pumps utilize an open throat seal chamber as shown in Figure 7. This design can lead to erosion of the seal gland caused by the velocity of the slurry around the seal. The conventional remedy is to use flow modifiers (ridges or “speed bumps”) machined into the ID of the seal chamber.

A better seal chamber design is shown in Figure 8, where the slurry velocity is interrupted by the closed frame plate between the impeller and the seal chamber. There is still a large cavity around the seal which promotes the flow of liquid to cool the seal. So that standard, off-the-shelf seals can be used, the seal mounts to a seal back plate,

The piping plan for connecting multiple pumps/seals/support systems plant-wide in a modified API Plan 53A is shown in Figure 9. Each mechanical seal has its own support tank with pressure regulator, to provide clean barrier water at the appropriate pressure for each pump (typically 15 to 30 psi over the pressure in each stuffing box or seal chamber). Each tank is fitted with a non-return valve so that reverse-contamination of the plant water system is not possible. Even if the plant water pressure should fail for a short time, the non-return valves keep each tank at the proper pressure so as to maintain the important fluid film.

A well-engineered solution will cut seal water consumption (per pump) from an estimated six million gallons of water per year with a traditional flushed seal or packing, to less than 10 gallons per year, for a 99.999% reduction in seal water usage.

Note that there is ZERO wasted water going to drain with the modified API Plan 53A shown in Figure 9.

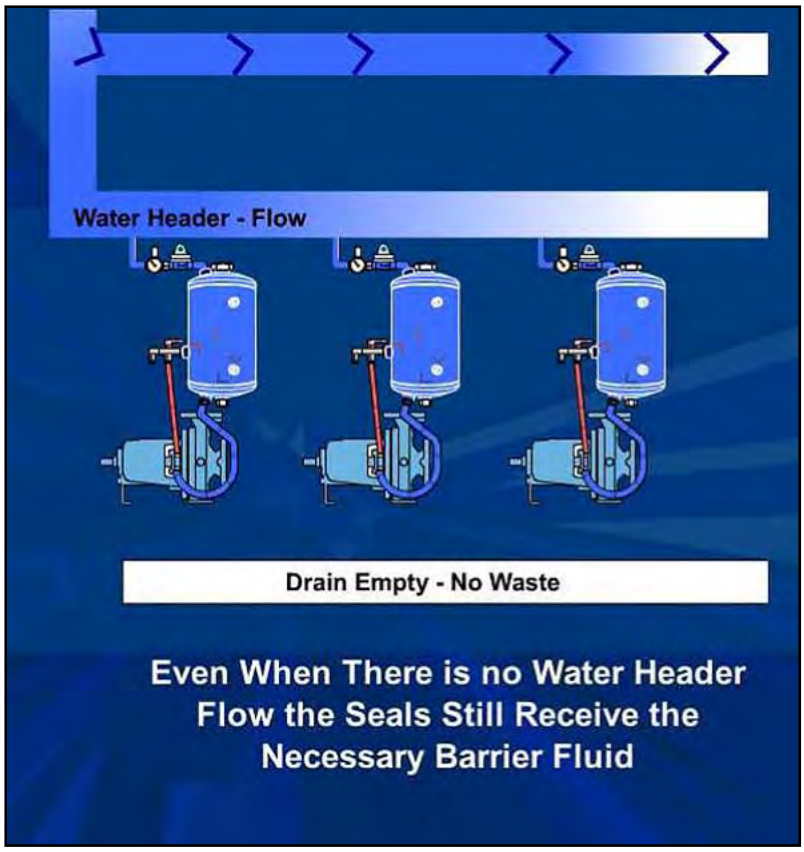

Figure 9. Double mechanical seals and seal pots on a Modified API Plan 53A system. An unlimited number of process pumps can be individually sealed with no cross-contamination, and no wasted water to drain.

CASE HISTORY #1 – DIAMOND MINE, BOTSWANA, AFRICA: *"1 BILLION GALLONS OF WATER SAVED"*

The Debswana Orapa mine is the largest diamond mine in the world (Figure 10). The mine is located in an extremely arid region of Africa, where water is at a premium. Large Warman F-frame pumps were sealed with gland packing which required 19 gpm of gland water per pump. To reduce water consumption in 2004-2005, double mechanical seals and tank systems were fitted to 18 Warman 6X4 E-frame, and 12X10 F-frame slurry pumps at Plant #2. Currently, these 18 seals are running fine with reported total savings of 1.1 billion gallons of water with a value (in this desert country) of $3.9 million.

Figure 10. Debswana – Orapa diamond mine, Botswana

CASE HISTORY #2 – MINERAL SANDS MINE, SOUTH AUSTRALIA: ***"3-WEEK PAYBACK / ROI"***

A large Warman 14/12 GAH pump was pumping a mineral sand slurry and was leaking excessive packing gland water, creating excessive mud on site (Figure 11). This pump required 9 gallons per minute (gpm) of gland water on the packing for proper operation. The packing was replaced with a double mechanical seal and tank system in September, 2008, reducing the leakage to zero. The improvement in the physical condition of the pump area is obvious from the photo in Figure 12, as the double seal resulted in **zero leakage to the environment**. In addition, the mine operator found that, with the elimination of the packing gland water going into the product, he could actually pump more product and less water. The entire seal upgrade paid for itself in only three weeks.

A total of 24 pumps have been upgraded to double seals on this site in 2009, and most of the seals are still running in 2012.

Figure 11. Warman GAH slurry pump with leaking packing gland water, BEFORE installation of mechanical seals.

Figure 12. Same Warman slurry pump as above, AFTER installation of double mechanical seal and tank system (in circle).

CASE HISTORY #3 – POTASH MINE, CANADA: ***"$30 MILLION PRODUCT SAVINGS"***

The potash refining process uses a working fluid of saturated brine to process the crushed ore through a series of scrubbers and flotation steps to remove insoluble minerals and unwanted salts. Saturated brine is used because it will not dissolve the potash solids. Introduction of any fresh water at this stage will dissolve potash solids and reduce the potash yield.

One gallon of fresh water will dissolve about one pound of potash crystals. The slurry pumps on the scrubbers and flotation circuits have OEM-recommended water flush to the packing of 14 to 16 gpm. Conservatively, 1/3 of this gland water enters the potash process, resulting in the loss (by dissolving) of 1,314 tons of potash, worth more than $600,000 per pump per year.

A potash mine in Canada recognized this loss and has begun to convert their slurry pumps from packing to double mechanical seals and tank systems. The first mechanical seal was installed on a froth feed pump in 2010 which historically leaked gland water on the ground, as well as consumed potash solids due to plant water being injected into the process.

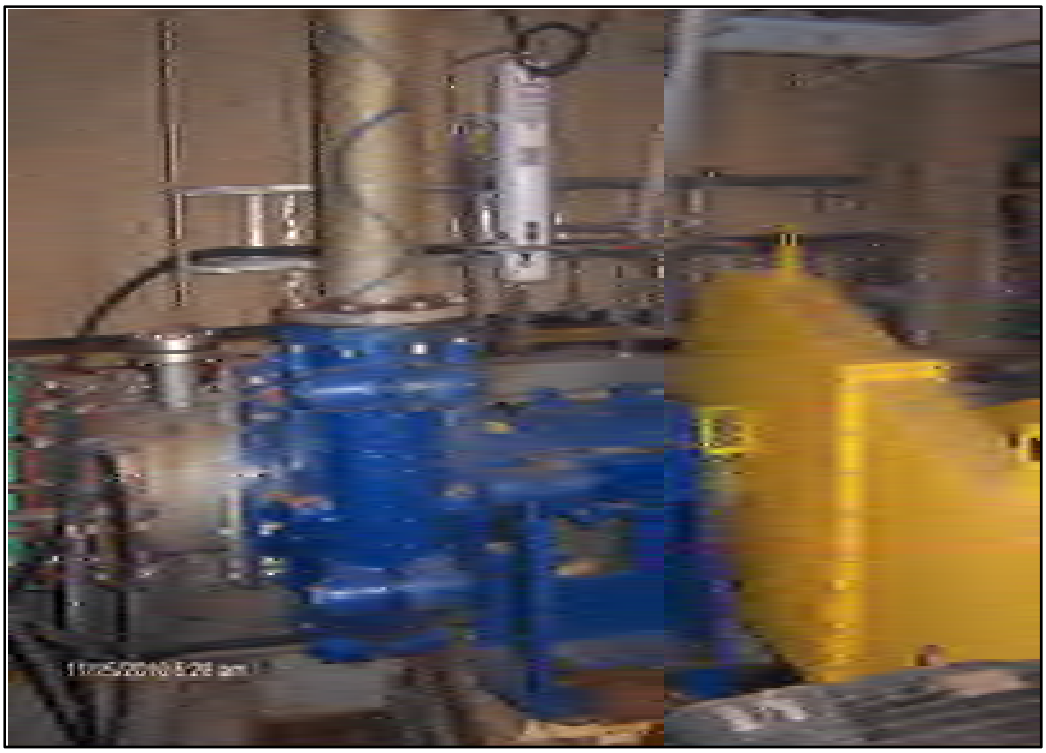

Figure 13. Warman AH-F Froth feed pump, fitted with double mechanical seal and tank system.

This seal system has been installed and running for two years (Figure 13). The customer is currently installing 50 new slurry pumps with double mechanical seals and tanks, making a total of 65 pumps with mechanical seals on the property. When the 50 new pumps are fully operational, it is estimated that as much as <u>$30 million in potash product per year could be saved</u>, as it will no longer be dissolved in the injected gland water.

CASE HISTORY #4 – SLUDGE DEWATERING OPERATION, WISCONSIN, USA: ***"IMPROVED UPTIME"***

The Fox River in Green Bay, Wisconsin, is currently undergoing a $1 billlion, ten-year campaign to dredge millions of cubic yards of PCB-contaminated sludge from the bottom of 15 miles of the river and bay (Figure 14). For more info, see www.**foxriver**cleanup.com/.

Figure 14. Dredge operating on the Fox River in Wisconsin

Figure 15. Warman slurry pump showing double mechanical seal and white tank.

The slurry is pumped to a plant where the treated solids are separated from the water with eight of the world's largest filter presses, which are fed by 16 Warman 4X3 DAH slurry pumps (Figure 15). These pumps are challenging to seal, as they ramp up from near-zero pressure and high flow, to 130 psi and no flow, with each cycle. The filter press manufacturer selected mechanical seals over packing to seal the pumps, because the addition of packing gland water at the filter presses would increase both the cycle time and the cost to de-water the slurry. The mechanical seals were originally installed as double mechanical seals with unpressurized barrier tanks. This design, unfortunately, does not promote a stable fluid film for the seal faces. During 2009 and 2010, there were 28 seals replaced on these 16 pumps, causing significant down time.

Figure 16. Four of the 16 Warman pumps serviced by the pressurization skid in the background.

During the winter shutdown of 2010-2011, the plant operator requested help to re-design the sealing system. Dual mechanical seals with patented pumping rings were selected, each serviced by a 25-liter barrier tank which thermosiphons the heat away from the seals (Figure 16). Most importantly, to supply the barrier fluid with clean water at 150 psi to control and maintain a stable fluid film on the seal faces, a self-contained pumping skid was utilized, which supplies all 16 pumps, tanks and seals (see the diagram in Figure 17 below). The pumping skid consists of a 50-gallon water tank, a multi-stage centrifugal pump (with in-line spare), and an accumulator which holds pressurized water and cycles the pump on/off as required.

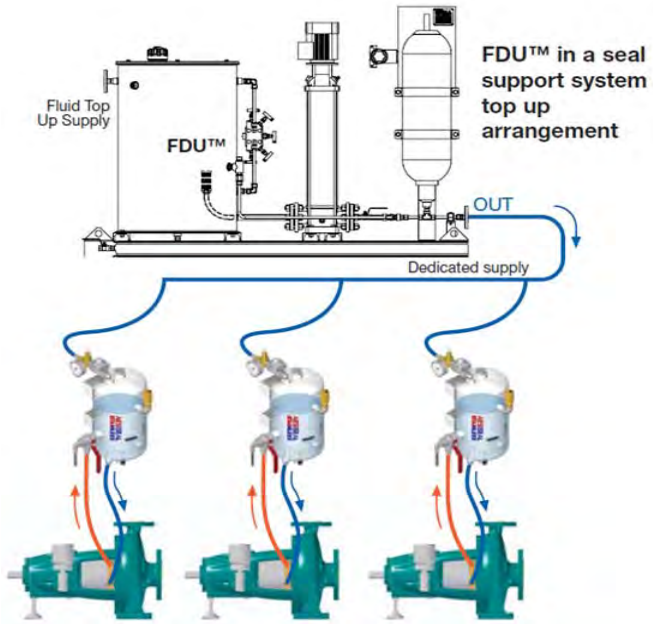

Figure 17. Typical arrangement of pumps, seals, and tanks that are serviced by a single self-contained water pressurization skid. At the Fox River project, 16 Warman pumps are serviced by one pressurization skid.

Using the new pressurized barrier system, there have been ZERO seal failures during the 2011 and 2012 operating seasons. This compares with 28 seal failures the previous two years with an unpressurized barrier system.

A digital flowmeter installed on the pressurization skid (Figure 18) showed that the system consumed only 25 gallons of water per year in total, or less than 2 gallons of water per pump per year.

Figure 18. Skid-mounted FDU unit with digital flow meter (arrow) provides pressurized water for seal barrier fluid.

On this project, the double mechanical seals, tank systems, and water pressurization skid have eliminated the down time and costs associated with mechanical seal failures, while at the same time providing a safe and reliable sealing method that does not require any packing gland water that would dilute the de-watering process.

SUMMARY: DOUBLE MECHANICAL SEALS REDUCE MINE WATER FOOTPRINT AND IMPROVE UPTIME

Packing has several drawbacks when used to seal rotating shafts on pumps. Perhaps the biggest drawback is the requirement for millions of gallons of gland water per pump per year, for cooling and lubricating the packing.

Double mechanical seals and tank systems eliminate all of the problems associated with packing and can greatly reduce a mine's water footprint, while also reducing the manpower required to care for the packing and increasing the uptime/availability of the equipment. In those cases where the process is sensitive to dilution, double mechanical seals can save millions of dollars per year in lost product.

Not just any mechanical seal arrangement will accomplish the above goals. The pump owner must select a robust double mechanical seal and then maintain a clean, stable fluid film across the seal faces. This is accomplished by the use of a self-filling, maintenance-free tank support system which maintains the seal barrier fluid pressure at 15 to 30 psi over the pump fluid pressure.

Thousands of double mechanical seals and tank systems are in operation world-wide in Mining and other industries, with a total estimated savings over 25 billion gallons of water each year.

Note: 1 billion, as used in this article, refers to one thousand million, or 10^9.

AESSEAL® shares in WaterAid's vision of a world where everyone has access to safe water and effective sanitation, and we donate a portion of the profits from our Water Management Systems to this charity.

www.wateraid.org

AESSEAL®

EXPERIENCE THE EXCEPTIONAL

Experience the exceptional – contact your local representative to see how we can help you. Full details at:

www.aesseal.com